Please SCAN QR code for
German / French / Spanish manual :



SMALL MEDIUM LARGE

CONTENT

1. General Notice and Safety Precautions page 1
2. Technical data and ordering info (article codes) page 2
3. Installation instruction page 3
4. Operation instruction page 4
5. Warranty page 4
6. Appendices page 5 / 6

Version table

Nr	date	Description
1.0	20-05-26	Initial version, see note *
2.0	19-06-26	Added warranty info, feedback and MODBUS wiring
2.1	31-07-26	230VAC tolerance changed to +/-10%
3.0	17-09-26	Weight (page 2) and RC mode added (see appendix D)

*Preliminary Data – Subject to Change.

General notice
Changes or modifications not explained/approved in this manual voids your authority to operate this equipment.
Cergen shall not be held responsible for any damage caused due to incorrect installation of the product and/or the misunderstanding of this manual.
Cergen reserves the right to make any modification to this manual or the information contained herein at any time without notice.
No design data such as sample pictures provided in this manual may be modified or duplicated except for the purpose of personal use.
To ensure the recycling of all possible materials and proper disposal treatment of components, please return the product to Cergen at end-of-life.
Check the system regularly (once per 3 months) on faults.

Important safety precautions
Attention! Components in the installations are exposed to high voltages and currents. Follow these instructions carefully in order to reduce the risk of fire or electric shock.
The following regulations and standards are considered applicable and mandatory to read prior to the installation of electrical equipment:
International Standards: IEC 60364-7-712 Electrical installations of buildings - Requirements for special installations or locations - Solar Photovoltaic (PV) power supply systems
M1S3002: Microgeneration Installation Standard - requirements for contractors undertaking the supply, design, installation, set to work commissioning and handover of solar photovoltaic (PV) microgeneration systems
Local building regulations
Guidelines for lightning and overvoltage protection
Note !
It is essential to uphold the limits for voltage and current in all possible operating conditions (see page 2; Technical Data'). Also keep in mind the literature on correct dimensioning and sizing of cabling and components.
The installation of these devices may only be performed by certified technical personnel
The wiring schematics of the Firefighter Safety Switch can be found at the end of this manual. Appendix A.
All the installation works should be tested in accordance with relevant local legislation at the time of installation.
Intended use of the Firefighter Safety Switch
The Firefighter Safety Switch has been especially developed as a safety device for direct current (DC) photovoltaic installations. The DC disconnect switch is used to disconnect the connected strings of the installation in case of an emergency situation. Such an emergency situation could be in case of fire.
Location of the Firefighter Safety Switch
The Firefighter Safety Switch needs to be placed as close to the solar panels as possible. Due to its enclosure, the switch is protected against external influences like dust and moisture. The whole set-up is conforms to IP66 which makes it suitable for outdoor usage when needed.
NOTE! The switch enclosure may not be installed in direct sunlight or be in direct contact with (continuous) ingress water.
Normal operation:
The FFS will automatically switch to the OFF position, breaking the DC connection between the solar panels and the inverter, after the AC power to the FFS is interrupted. The FFS will automatically switch to the ON position, restoring the DC connection between the solar panels and the inverter, once the AC power to the FFS is restored.
Special Operation:
If the temperature inside the FFS enclosure exceeds the 90°C * , the FFS will automatically switch to OFF to protect the internal components and create a safe situation. When the installation is checked and the FFS is not affected, the FFS can be switched ON again by removal and re-applying the AC voltage to the FFS.
A problem solving table is present at the end of this manual or please contact the Cergen Support team when necessary: sales@cergen.com

© Cergen GmbH 2026, Subject to change without notice and errors excepted. The customer cannot derive rights from the data in this preliminary version of the document !
The device and its application descriptions, contexts of use, external controls, installation and operation information are provided to the best of knowledge. The customer / user should examine the information and recommendations and the relevant technical regulations before using the products for its intended purpose.

2. TECHNICAL DATA AND ORDERING INFO

OUTSIDE DIMENSIONS (BOX SIZE A / B / C)

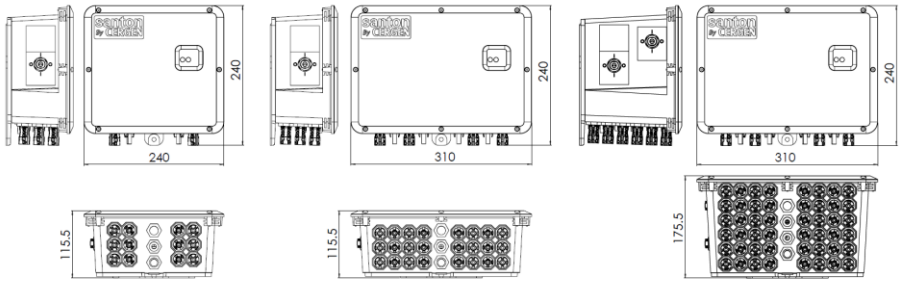

Small (A)
2/3 strings
Weight:1.88 kg

Medium (B)
4/6 strings
Weight: 2.63 kg

Large (C)
8/10/12 Strings
weight: 4.45 kg

Ratings IEC 60947-3: 2021				
Rated operational voltage	Ue	1100	1500	V dc
Rated operational current DC - PV1	Ie		50	A dc
Rated operational current DC – PV2	Ie	50	25	A dc

Technical parameters			
Operation methods	Standard: Motor / Optional: Manual		
Actuator	Standard: Motor / Optional: Allen Key		
Method of independent operation	Standard: Motor / Optional: Allen Key		
Positions	12 (OFF) and 3 o'clock (ON)		
Position status indicator	Standard: Shaft (see operation instruction) / LED		
Actuator operation force (max.)		1,4	Nm
Mechanical life without load	10000		
Number of cycles with load PV1	1500		

Advised conductor size (Cu) in mm^2 for 25A ≥ $6mm^2$, for 50A ≥ $10mm^2$

Technical parameters			
Description	Symbol	Value	Unit
Ambient operating temperature (min. - max.). Outside housing.	T ambient	-30 – + 50	°C
Allowed storage temperature (min. - max.)	T storage	-30 - + 70	°C
Rated operational voltage		230 ± 10%	V ac
Voltage range - AC		100 – 240	V ac
Frequency range	f	50 / 60	Hz
Rated operational current (stand-by)	I	10	mA
Rated operational current (peak)	I	95	mA
FB terminals (FB1 / FB2) voltage		230 ± 10%	V ac
FB terminal current		2	A
Temperature limit automatic shut down. Inside housing * preliminary data	T	>90 *	°C
Charging time capacitor bank	t	55	s
Time delay function, in 10 s intervals	Up to 90 s , in 10 s intervals.		
MODBUS	RS 485, see appendix B and D		
IP rating	IP66		
Safety Class	Class II		

ARTICLE CODES

Strings	Code
2	FFS20-A2M-4P
3	FFS20-A3M-6P
4	FFS20-B4M-8P
6	FFS20-B6M-LP
8	FFS20-C8M-88P
10	FFS20-C10M-JJP
12	FFS20-C12M-LLP

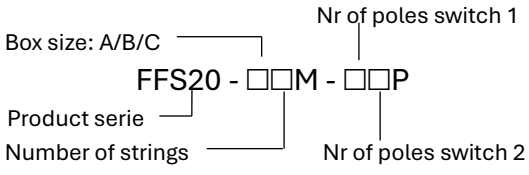

© Cergen GmbH 2026, Subject to change without notice and errors excepted. The customer cannot derive rights from the data in this preliminary version of the document !
The device and its application descriptions, contexts of use, external controls, installation and operation information are provided to the best of knowledge. The customer / user should examine the information and recommendations and the relevant technical regulations before using the products for its intended purpose.

3. INSTALLATION INSTRUCTIONS

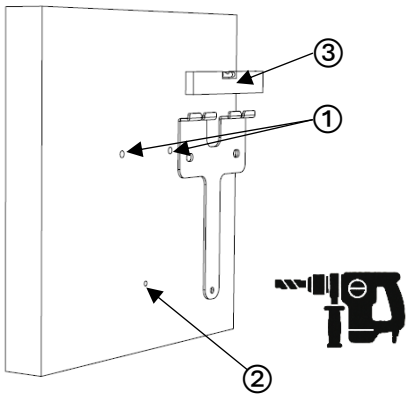

Drill 3 holes. At top 2 holes for Ø 6 screws (optional Ø 8) ①and 1 hole at the bottom for Ø 6 screw (optional Ø 4) ② use a level ③

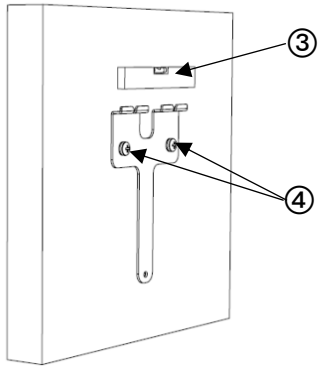

Mount the included wall bracket on the wall use a level ③. Use two Ø 6 screws (Ø8 optional) at the top ④ . Screws not included

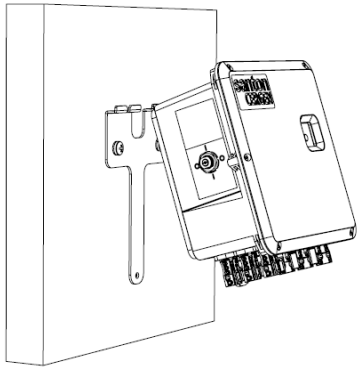

Hook the FFS at the top side behind the wall bracket

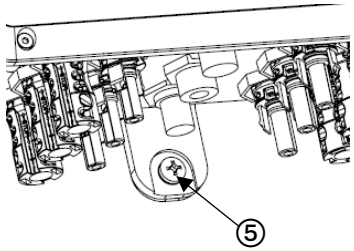

Fix the FFS at the bottom with an Ø6 screw (Ø4 optional). Do not forget this step !!

Connect the outside cables in the order that is most practical. Advise: start with MC4, feedback and RS 485 (optional) cables. Connect the AC cable last. Feedback and RS485 see appendix C. see the drawings underneath explaining the positions of the different connector ports. Note: for the MC 4 connectors Stäubli brand is used.

A = AC connector 230V AC
B = FB port 230V – 2A AC (optional)
C = RS 485 port (optional)

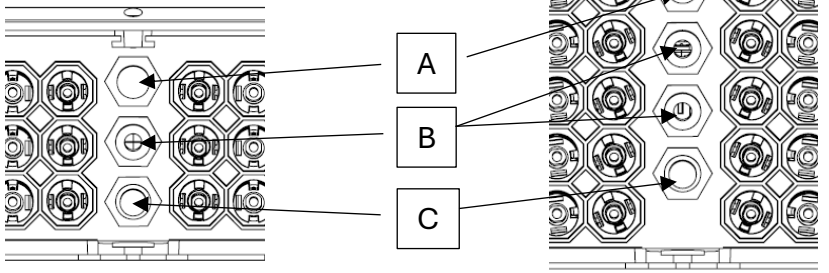

BOX A and B BOX C

Testing

Turn ON the AC power. Wait one minute while SCU is charging. Charging LED is blinking. Also see LED indicator discription on next page



After One minute the FFS will turn to ON within ca. 3 sec



Now turn OFF the AC Power, the FFS will turn to OFF within ca. 3 sec.



Now turn the AC to ON again, FFS will turn to ON again and you are finished testing.

© Cergen GmbH 2026, Subject to change without notice and errors excepted. The customer cannot derive rights from the data in this preliminary version of the document !
The device and its application descriptions, contexts of use, external controls, installation and operation information are provided to the best of knowledge. The customer / user should examine the information and recommendations and the relevant technical regulations before using the products for its intended purpose.

4. Operation instructions

Standard operations

The FFS can be operated through the push button (menu) and will show feedback through the display and LEDs.

Display: shows the delay time in 10 sec steps / feedback FFS push button menu / error codes. See **appendix D** for more details. Note: after 1 hour the display will turn OFF (power saving mode) , to reactivate it and see the status push the FFS2.0 buttons.

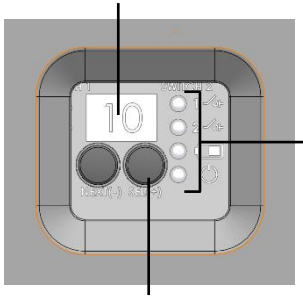

LED indicators: see underneath description for explanation

FFS Button functions (+ / -)

+ = add 10 sec delay
- = substract 10 sec delay
+ and - > 5 sec = enter function menu,
see description in **appendix D** for more details

LED INDICATOR DESCRIPTION			
Function	AC power status	Loading status	ON /OFF position MDX2.0 1 & 2
Symbol			
Mode 1	AC present	Loaded	OFF (safe no voltage)
Mode 2	AC not present	Unloaded	ON (danger 1 – 1.5kV)
Mode 3 / 4		power low **5Hz** blink fault **1Hz** blink	motor running **5Hz** blink fault **1Hz** blink

Manual operation: Maintenance and emergency operation

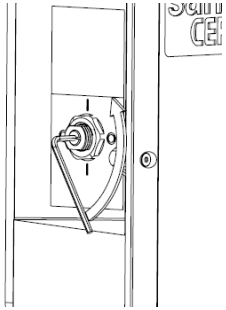

In case of maintenance or emergency operation use an allen key 2,5mm to turn 90° CCW from ON to OFF position. See picture at the left.
After this the FFS display will show **Hd**, meaning the system is now in manual mode. For more explanation see **appendix D**

Note: when you want to leave manual mode again use the function F4 in the FFS function menu to change to automatic mode as described in Appendix D

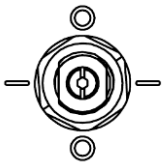

OFF position, see direction of groove in shaft

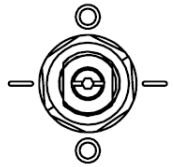

ON position, see direction of groove in shaft

Attention !

1. When turning to ON when in manual mode and the AC has been disconnected the feedback port will not give an ON signal.
2. Do not manually operate the switch during charging of FFS;
3. When connecting multiple FFS units, different addresses must be set for each FFS device in advance, also see appendix C;
4. You can manual operate one switch for no more than six times after the AC is disconnected or the loading status LED (see led description overview) has started blinking green. The number of operations depends on the stored energy left in the energy storage bank.

5. Warranty:

Cergen FFS products are warranted against defects in materials and workmanship for 5 years from the date of manufacture, provided they are used in accordance with the product manual. This warranty is in addition to statutory rights. Cergen will repair or replace defective products at its discretion. This warranty excludes damage or defects resulting from misuse, improper installation, improper maintenance, modifications, external damage, and normal wear. Liability limited as permitted by law; no effect on non-excludable rights. Service: contact Cergen local distributor or sales@cergen.com.

© Cergen GmbH 2026, Subject to change without notice and errors excepted. The customer cannot derive rights from the data in this preliminary version of the document !
The device and its application descriptions, contexts of use, external controls, installation and operation information are provided to the best of knowledge. The customer / user should examine the information and recommendations and the relevant technical regulations before using the products for its intended purpose.

APPENDIX A: CABLING (EXAMPLE)

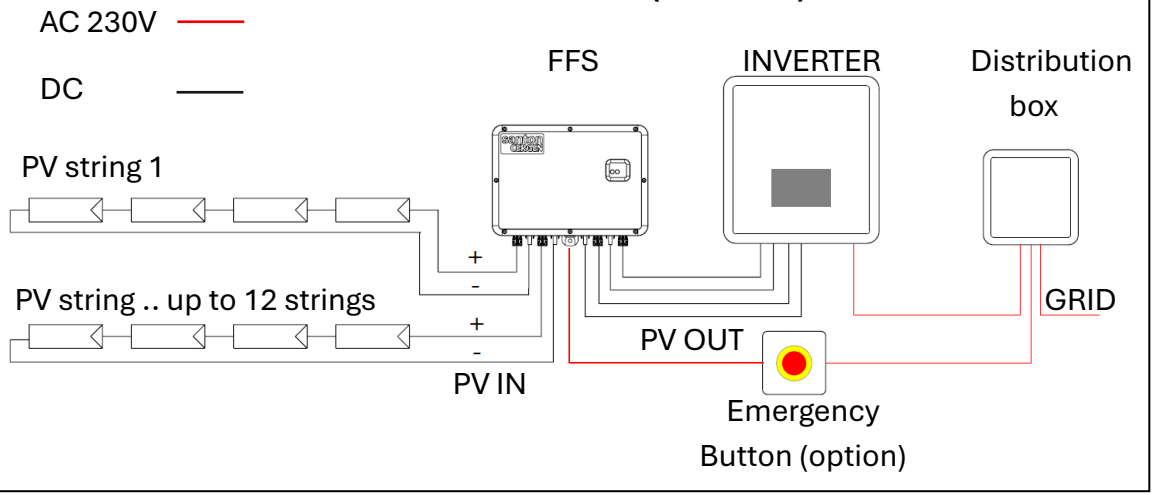

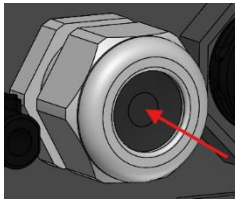

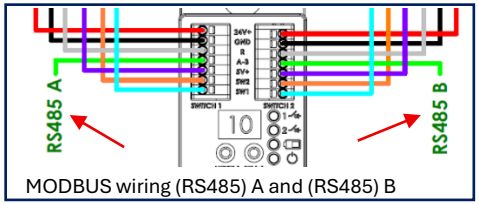

MODBUS wiring (RS485) A and (RS485) B

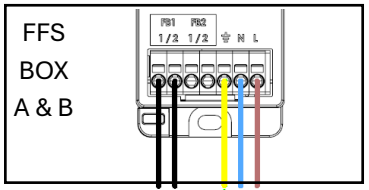

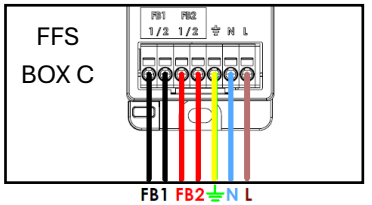

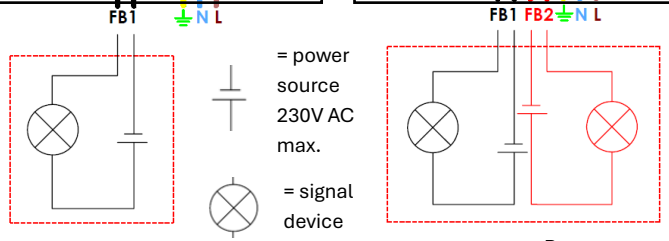

Remote area

Appendix B: Optional Modbus / RS485 functions

MODBUS	
FUNCTION	**INFO STATUS**
REMOTE MONITORING / INFO	
AC STATUS	ON / OFF
ENERGY BANK STATUS	LOW / LOADING / HIGH / FAULT
DC SWITCH STATUS	ON / OFF / FAULT
TEMPERATURE	°C
OPERATION MODE	AU / Hd / RC
FIRMWARE VERSION	VX.XX (e.g. V0.01)
REMOTE ACTIONS (Individual FFS or group of FFS)	
FORCE SWITCH TO ON OR OFF	ON or OFF (RC displayed, see appendix D)
RESTART DEVICE TO CLEAR FAULT	RESTART
SET DELAY TIME	0 - 90 S in 10 S INTERVALS
RESET DEVICE TO FACTORY SETTINGS	RESET

Appendix C: FFS FEEDBACK and MODBUS wiring.

Open the cover and feed the wiring through the designated ports, port B (see chapter 3 manual) is for FEEDBACK wiring and port C (see chapter 3 manual) is for MODBUS wiring. To punch a hole in the area indicated with a red arrow in the glands at these ports use an Awl or other sharp punching tool.

Connect inside the FFS to the FB ports on the SCU. See above for example wiring scheme. Note: FB wiring is optional to have a signal at a remote location (e.g. by using a LED) of the DC switch status: ON or OFF.

When using MODBUS connect to terminals A and B on the SCU.

Make sure that after connecting the wiring, the cover screws are tightened to the specified torque of 1.3 Nm ± 0.1 Nm (preliminary data) to maintain the IP rating provided at shipment. Failure to correctly close and tighten the cover may compromise the IP rating and may affect warranty coverage if resulting damage is caused by improper installation.

© Cergen GmbH 2026, Subject to change without notice and errors excepted. The customer cannot derive rights from the data in this preliminary version of the document !
The device and its application descriptions, contexts of use, external controls, installation and operation information are provided to the best of knowledge. The customer / user should examine the information and recommendations and the relevant technical regulations before using the products for its intended purpose.

Appendix D: FFS menu operation and error codes

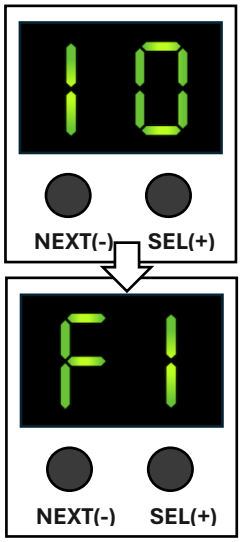

Main menu: the display will show error code, manual mode **(Hd, pic 3)** or delay time (0s by default) is (in this order of priority)

press both **NEXT (-)** and **SEL (+)** > 5s to enter the **Function menu**

Function menu : starts with F1.

See table for description and operation by **NEXT (–)** and **SEL (+)** buttons

Function description	NEXT (-)	SEL (+)
F1= restart	go to F2	restart FFS and clear faults / related error codes
F2 = set communication address (pic1)	go to F3	enter address setting. 128 addresses can be set: 1-99,A0-A9,B0-B9,C0-C8. Press – or + to de-/increase address number. Press + or – >2s will accelerate de-/increase address number. Not pressing a button for >5 s will save the adress after 2x flashing and return to main menu. Default adress is 1.
F3 = reset (return to factory settings)	go to F4	Enter the confirmation menu (pic 2). Press – for N(o) = cancel reset or press + for Y(es) = confirm reset and return to main menu.
F4 = mode selection	go to F5	Select the operation mode. Manual mode (pic 3) or Automatic mode (pic4). Press – or + to change between modes. Not pressing a button for > 5s will save the selected mode after 2x flashing and return to main menu.
F5 = forced trip	go to F6	execute forced trip and return to the main menu. FFS Display shows **Hd (pic3)** after executing this function. Switch can now be controlled manually. For leaving this mode see F4 function.
F6 = forced closing	go to F0	execute forced closing and return to the main menu. FFS Display shows **Hd (pic3)** after executing this function. Switch can now be controlled manually . For leaving this mode see F4 function.
F0 = return to main menu	go to F1	return to the main menu

Important Notes: 1) When the FFS is in manual mode MODBUS commands are not possible. To get to automatic mode again use push button menu of FFS **2)** By manually switching OFF or ON or by using push button menu you can bring the FFS into manual mode. **3)** When a forced ON or forced OFF command is given through Modbus the FFS will go into Remote Control mode (RC). When in this mode (pic5) the AC is turned OFF, the DC switch will go to OFF (similar to AU mode) or stay in the OFF position. When the AC is turned ON in this mode, the switch will not change its position. Note: By using the F3 / F4 / F5 or F6 push button functions on the FFS the user can leave the RC mode



Pic1. Adress



Pic2.Reset No / Yes



Pic3. Manual mode (Hd)



Pic4. Automatic mode (AU)



Pic5. Remote Control mode (RC)

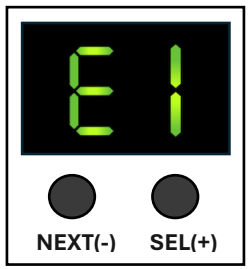

Description of Error Codes

Important Notes: 1) Each time the FFS is (re)started / powered on the capacitor health is checked. If there is an issue an error code is displayed. **2)** When multiple errors occur at the same time, the error codes will be displayed in a rotating manner every 1 sec.

Code	Description	What to do
E1	FFS temperature > 90°C, over-temperature protection is activated	Wait for the temperature to drop. Solve cause of over-temperature and use F1 to clear error code
E2	Switch 1 is in wrong position during power on	Wait for FFS to have charge. Use F1= restart: switch will go to designated position, error code is cleared.
E3	Switch 2 is in wrong position during power on	
E4	Capacitor bank is damaged	Change to new SCU.
E5	Switch 1 did not reach the designated position within specified time	Use F1= restart, switch will go to designated Position, error code is cleared
E6	Switch 2 did not reach the designated position within specified time	
E7	Charging- / power module fault / damage	Use F1= restart. If fault not cleared change to new SCU

© Cergen GmbH 2026, Subject to change without notice and errors excepted. The customer cannot derive rights from the data in this preliminary version of the document !
The device and its application descriptions, contexts of use, external controls, installation and operation information are provided to the best of knowledge. The customer / user should examine the information and recommendations and the relevant technical regulations before using the products for its intended purpose.