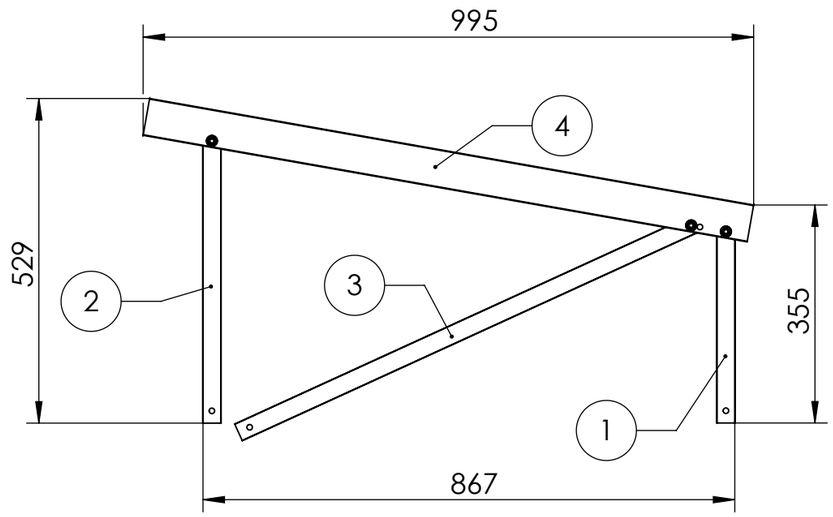

Isometric

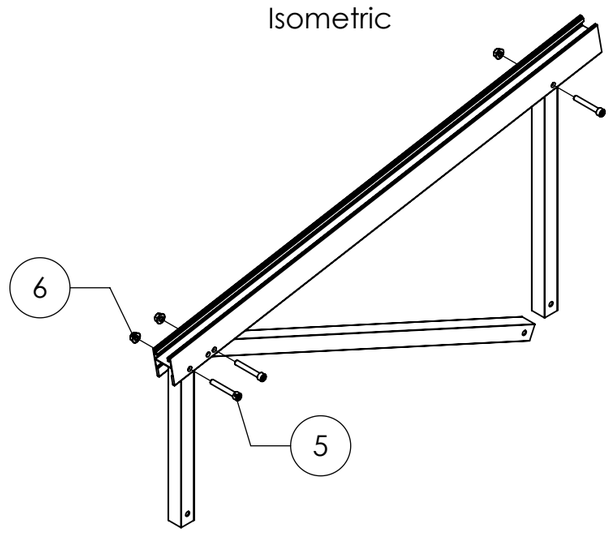

Pos.No.	Designation	Material	Quantity
1	GreenRoof Brace 322	EN AW 6060 T6	1
2	GreenRoof Brace 480	EN AW 6060 T6	1
3	GreenRoof Brace 831,5	EN AW 6060 T6	1
4	GreenRoof Beam 1000	EN AW 6063 T66	1
5	Socket head bolt serrated - sim. ISO 4762 - M8x55	A2-70	3
6	Hexagon flange nut serrated - sim. ISO 4161 - M8	A2-70	3

K2 Systems GmbH
Haldenstr. 1
71272 Renningen
Germany
+49 7159 42059-0

Designation: Data sheet GreenRoof Vento 10° Short Beam Set

	Name	Date	Material:		Item no.:	2004783	A3
Designed	C. Niedermaier	11.02.2025	see table				
Approved	A. Soumpalas	31.03.2025	Surface: -		Drawing no.:	07-261-01	All dimensions in mm
Last change	M. Schuler	31.03.2025	Weight: ca. 2241.80 g/pc	Scale: 1:10			Sheet 1 of 1

This drawing is the sole property of K2 Systems GmbH. It is protected by copyright and may only be copied, reproduced or distributed to a third party with explicit permission!