Ambient Temperature Sensor

TEMPSENSOR-AMBIENT

Installation Guide

TempsensorAmb-IEN110610 | 98-0042210 | Version 1.0

EN

Table of Contents

1 Notes on this Guide 4
1.1 Area of Validity 4
1.2 Target Group 4
1.3 Symbols Used 4
2 Safety 5
2.1 Appropriate usage 5
2.2 Safety Precautions 5
3 Scope of Supply 6
4 Assembly 7
4.1 Selecting the Mounting Location 7
4.2 Assembling the Ambient Temperature Sensor 7
5 Electrical Connection 8
5.1 Connecting Cables to the Ambient Temperature Sensor 9
5.2 Connecting the Ambient Temperature Sensor to the Sunny SensorBox 10
6 Decommissioning 12
6.1 Disassembling the Ambient Temperature Sensor 12
6.2 Disposing of the Ambient Temperature Sensor 12
7 Technical Data 13
8 Contact 14

1 Notes on this Guide

This guide describes the installation and commissioning of the Ambient Temperature Sensor. Store this guide where it will be accessible at all times.

1.1 Area of Validity

This guide applies to the TEMPSENSOR-AMBIENT upgrade kit.

1.2 Target Group

This guide is for electrically skilled persons.

1.3 Symbols Used

The following types of safety precautions and general information appear in this document:

DANGER!

"DANGER" indicates a hazardous situation which, if not avoided, will result in death or serious injury.

WARNING!

"WARNING" indicates a hazardous situation which, if not avoided, could result in death or serious injury.

CAUTION!

"CAUTION" indicates a hazardous situation which, if not avoided, could result in minor or moderate injury.

NOTICE!

"NOTICE" indicates a situation that can result in property damage, if not avoided.

Information

Information provides tips that are valuable for the optimal installation and operation of your product.

2 Safety

2.1 Appropriate usage

The TEMPSENSOR-AMBIENT Ambient Temperature Sensor consists of a PT100 measuring resistor that is accommodated in an IP65 plastic enclosure. The TEMPSENSOR-AMBIENT Ambient Temperature Sensor enables measurements in a 4-wire system. The measurement range of the Ambient Temperature Sensor is between –30 °C and +80 °C. Connect the sensor to Sunny SensorBox for further processing of the ambient data.

The Ambient Temperature Sensor is suitable for use only with original SMA accessories or with accessories recommended by SMA Solar Technology AG.

Appropriate usage also includes observing all further documentation relating to this device and its components.

2.2 Safety Precautions

NOTICE!

Destruction of the PV plant by a lightning strike.

All devices installed on a rooftop must be integrated into the existing lightning protection of the PV plant.

3 Scope of Supply

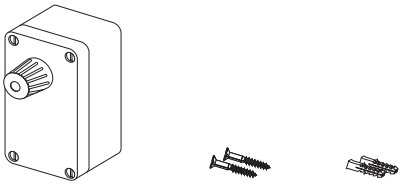

Position	Quantity	Description
A	1	TEMPSENSOR-AMBIENT (Ambient Temperature Sensor)
B	2	Screw
C	2	Screw anchor

4 Assembly

4.1 Selecting the Mounting Location

- The Ambient Temperature Sensor must be assembled with the cable gland pointing downwards in order to prevent water from accumulating on the cable gland.
- Protect the Ambient Temperature Sensor from severe contamination and spray.
- See adjacent image for recommended alignment of the Ambient Temperature Sensor.
- Select an installation location which is in shade throughout the entire day.
- Make sure that heat cannot accumulate at the installation site.
- Please observe the maximum cable length of 30 m.

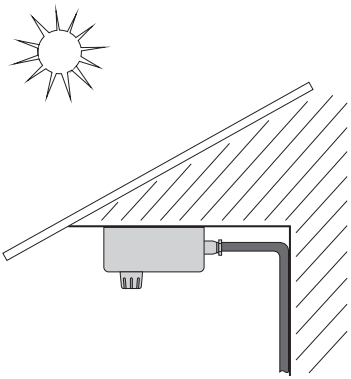

4.2 Assembling the Ambient Temperature Sensor

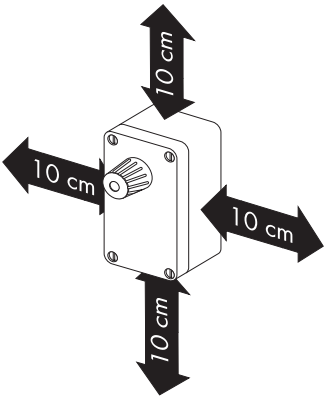

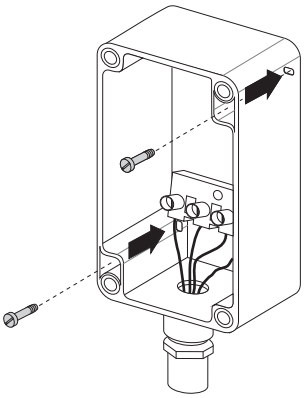

1. Undo four bolts on the Ambient Temperature Sensor enclosure and remove the lid.
2. Determine the mounting location and mark it. In the process, observe the mounting area (see image).
3. Fasten the Ambient Temperature Sensor enclosure using the screws supplied.

☑ The Ambient Temperature Sensor has been assembled.

5 Electrical Connection

4-wire system

To offset measuring errors that occur due to cable resistance, connect the temperature sensor via a 4-wire system. This type of connection ensures the current feed and voltage measurement are performed by separate pair cables. The length of the cable must not exceed 30 m.

Cabling Recommendations

NOTICE

Damage to Ambient Temperature Sensor due to ingress of fluids

Use only cables with a minimum diameter of 4.5 mm^2 to connect the Ambient Temperature Sensor. This prevents the Ambient Temperature Sensor from being damaged by any ingress of fluids (e.g. by rain or snow).

The cable length and quality have an effect on the signal quality. To achieve a good quality signal, observe the following instructions regarding cabling:

Outdoors

For the outdoors, use a cable with the following key properties:

- Cross-section: at minimum 4 x 0.25 mm^2, at minimum 4 x AWG 24
- Outer cable diameter: at minimum 4.5 mm, at maximum 7 mm
- UV-resistant

SMA Solar Technology AG recommends the following cable types:

- Lappkabel: UNITRONIC S-LifY11Y 4 x 0.34 mm^2
- Lappkabel UL-listed: UNITRONIC S-LifY11Y 4 x 0.34 mm^2

Indoors

It is permitted to use non-UV-resistant cables outdoors that are protected by a UV-resistant cable channel if the cables comply with aforementioned specifications.

SMA Solar Technology AG recommends the following cable types:

- Lappkabel: Unitronic LiYY 4 x 0.5 mm^2
- Lappkabel UL-listed: UNITRONIC LiYY UL/CSA 4 x AWG22/7
- Helukabel: TRONIC LiYY 4 x 0.5 mm^2

5.1 Connecting Cables to the Ambient Temperature Sensor

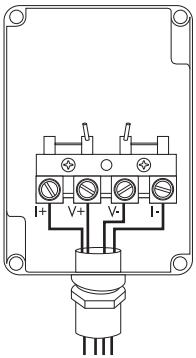

1. Undo the screws on the Ambient Temperature Sensor enclosure and remove the lid.
2. Remove the cable glands on the Ambient Temperature Sensor.
3. Remove the small interior protection plates. Make sure that the interior seal does not fall out.
4. Screw the cable gland halfway onto the enclosure.
5. Introduce the cables through the cable glands of the Ambient Temperature Sensor.
6. Connect wires to the screw terminals in 4-wire technology, see image on the right.
7. Note the color of the wires:

   I+_____

   V+_____

   V-_____

   I-_____

8. Fasten the cable gland of the Ambient Temperature Sensor to the Ambient Temperature Sensor enclosure by hand (torque: 0.8 Nm).
9. Connect the plug from the lid of the Ambient Temperature Sensor with the screw terminals, see image on the right. The polarity of the cables is user-defined.
10. Fasten the lid of the Ambient Temperature Sensor to the enclosures using the screws.

☑ The cable is connected to the Ambient Temperature Sensor.

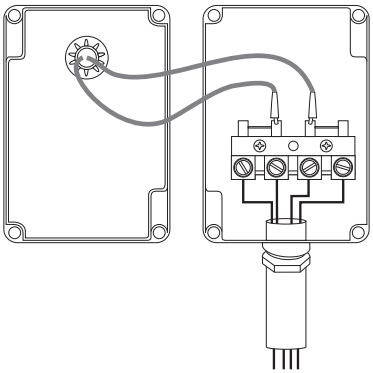

5.2 Connecting the Ambient Temperature Sensor to the Sunny SensorBox

The Ambient Temperature Sensor is connected to the "F6: TmpAmp" terminal of the Sunny SensorBox. Proceed as follows:

NOTICE!

Damage to the Sunny SensorBox due to ingress of fluids

- When working outdoors, make sure that no fluids (e.g. rain or snow) enter the open Sunny SensorBox.
- When inserting and removing the cable through the cable gland, make sure that the grommet fits correctly into the cable gland.

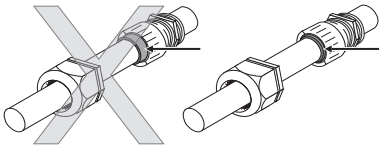

NOTICE!

Damage to the Sunny SensorBox due to porous rubber seals

The rubber seal in the Sunny SensorBox lid becomes porous over the course of time, and will no longer provide a tight seal if the Sunny SensorBox is then opened. If you open the Sunny SensorBox after an operating lifetime of more than 5 years, e.g. for upgrading the device, the rubber seal in the Sunny SensorBox lid must be replaced with a new one. In this event, order a replacement seal prior to maintenance work.

1. Open the lateral flaps of the Sunny SensorBox using the recesses.
2. Undo the screws in the corners of the Sunny SensorBox and open the enclosure lid towards the left. The lid is connected to the lower shell by hooks.
3. Unscrew the cable gland sleeve nut on the bottom center of the Sunny SensorBox and remove the filler-plugs.
4. Route the Ambient Temperature Sensor cable through the sleeve nut and fasten the cable glands of the Sunny SensorBox.

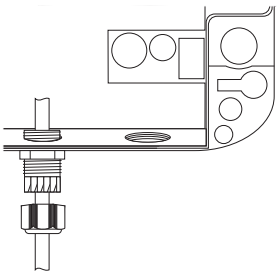

5. Remove resistance and bridge at the "F6: TmpAmb" terminal in the Sunny SensorBox.

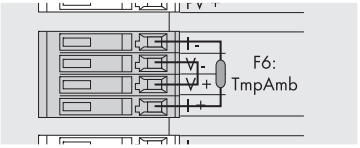

6. Connect the Ambient Temperature Sensor to the "F6: TmpAmb" terminal of the Sunny SensorBox. Please note the indicated wire colors (see page 9).
7. Check that the cable gland grommet is correctly in place.
8. Fasten the lock nut onto the cable gland manually to affix the cable (torque: 0.8 Nm).
9. Lay the cable using suitable fixing material.
10. Place the Sunny SensorBox enclosure lid on the lower enclosure shell.
11. Fasten screws manually (torque: 1 Nm) into the lower enclosure shell.

☑ The Ambient Temperature Sensor has been connected to the Sunny SensorBox.

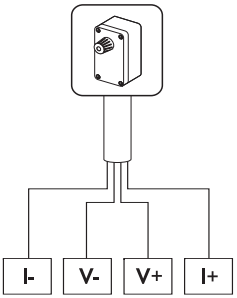

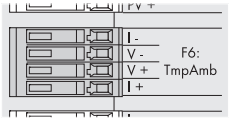

6 Decommissioning

6.1 Disassembling the Ambient Temperature Sensor

1. Remove the Ambient Temperature Sensor cable from the Sunny SensorBox.
2. Insert resistance (100 Ohm) and the bridge to terminal "F6: TmpAmb" in the Sunny SensorBox.

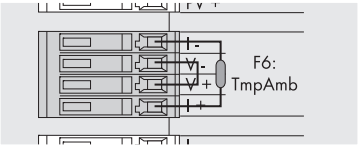

3. Undo screws on the Ambient Temperature Sensor enclosure and remove the lid.
4. Remove the enclosure from the wall.

☑ The Ambient Temperature Sensor has been disassembled.

6.2 Disposing of the Ambient Temperature Sensor

At the end of its life cycle, dispose of the Ambient Temperature Sensor in accordance with the applicable disposal regulations for electronic waste at the installation location at the time. Alternatively, return it labeled as "ZUR ENTSORGUNG" ("for disposal") to SMA Solar Technology AG, at your own expense.

7 Technical Data

General Data

Width x height x depth	100 mm x 52 mm x 67 mm
Measuring shunt	PT100
Mounting location	outdoors

Environmental Conditions

Ambient temperature	– 30 °C ... +80 °C
Protection rating	IP65

Connection cable*)

Maximum cable length	30 m

Measurement Range and Tolerances

Tolerance	at maximum ± 0.7 °C (class B)
Measurement range	– 30 °C ... +80 °C

*)not included in SMA scope of supply.

8 Contact

If you have technical problems concerning our products, contact the SMA Serviceline. We need the following information in order to provide you with the necessary assistance:

- Ambient temperature sensor model
- Sunny SensorBox firmware version
- Sunny WebBox firmware version
- Measured values of the Ambient Temperature Sensor

SMA Solar Technology AG

Sonnenallee 1

D-34266 Niestetal

www.SMA.de

SMA Serviceline

Inverters:	+49 (0)561 9522 1499
Communication:	+49 (0)561 9522 2499
Fax:	+49 (0)561 9522 4699
E-mail:	Serviceline@SMA.de

The information contained in this document is the property of SMA Solar Technology AG. Publishing its content, either partially or in full, requires the written permission of SMA Solar Technology AG. Any internal company copying of the document for the purposes of evaluating the product or its correct implementation is allowed and does not require permission.

Exclusion of liability

The general terms and conditions of delivery of SMA Solar Technology AG shall apply.

The content of these documents is continually checked and amended, where necessary. However, discrepancies cannot be excluded. No guarantee is made for the completeness of these documents. The latest version is available online at www.SMA.de or from the usual sales channels.

Guarantee or liability claims for damages of any kind are excluded if they are caused by one or more of the following:

- Damages during transportation
- Improper or inappropriate use of the product
- Operating the product in an unintended environment
- Operating the product whilst ignoring relevant, statutory safety regulations in the deployment location
- Ignoring safety warnings and instructions contained in all documents relevant to the product
- Operating the product under incorrect safety or protection conditions
- Altering the product or supplied software without authority
- The product malfunctions due to operating attached or neighboring devices beyond statutory limit values
- In case of unforeseen calamity or force majeure

The use of supplied software produced by SMA Solar Technology AG is subject to the following conditions:

- SMA Solar Technology AG rejects any liability for direct or indirect damages arising from the use of software developed by SMA Solar Technology AG. This also applies to the provision or non-provision of support activities.
- Supplied software not developed by SMA Solar Technology AG is subject to the respective licensing and liability agreements of the manufacturer.

SMA Factory Warranty

The current guarantee conditions come enclosed with your device. These are also available online at www.SMA.de and can be downloaded or are available on paper from the usual sales channels if required.

Trademarks

All trademarks are recognized even if these are not marked separately. Missing designations do not mean that a product or brand is not a registered trademark.

The *Bluetooth*® word mark and logos are registered trademarks owned by Bluetooth SIG, Inc. and any use of such marks by SMA Solar Technology AG is under license.

SMA Solar Technology AG

Sonnenallee 1

34266 Niestetal

Germany

Tel. +49 561 9522-0

Fax +49 561 9522-100

www.SMA.de

E-Mail: info@SMA.de

© 2004 to 2011 SMA Solar Technology AG. All rights reserved

SMA Solar Technology

www.SMA-Solar.com

SMA Solar Technology AG
www.SMA.de
SMA America, LLC
www.SMA-America.com
SMA Technology Australia Pty., Ltd.
www.SMA-Australia.com.au
SMA Benelux SPRL
www.SMA-Benelux.com
SMA Beijing Commercial Co., Ltd.
www.SMA-China.com
SMA Czech Republic s.r.o.
www.SMA-Czech.com
SMA France S.A.S.
www.SMA-France.com
SMA Hellas AE
www.SMA-Hellas.com
SMA Ibérica Tecnología Solar, S.L.
www.SMA-Iberica.com
SMA Italia S.r.l.
www.SMA-Italia.com
SMA Technology Korea Co., Ltd.
www.SMA-Korea.com