SUNPOWER | MAXEON

Fundamentally different, and better

Back Contact

Black Backsheet
Black Frame

Preliminary Datasheet

MAXEON 3 BLK | 400–410

112 CELL PANEL | POWER RANGE: 400–410 W | EFFICIENCY: Up to 21.6%

Part of the record-setting SunPower Maxeon product line, the sleek black SunPower Maxeon 3 solar panel elegantly blends into any roof, while delivering leading efficiency that maximises energy production and savings potential for homeowners.

SunPower Maxeon panels are world-renowned for their energy production and savings advantages that combine unmatched efficiency and reliability with an industry-leading warranty and an estimated 40-year useful life.[1,2,3,4]

SunPower Maxeon Solar Cell Technology

- Proven technology across 3.5 billion cells shipped
- Most efficient commercialized solar technology[1]
- Only solar cell with a solid-metal foundation, providing patented protection from breakage and corrosion

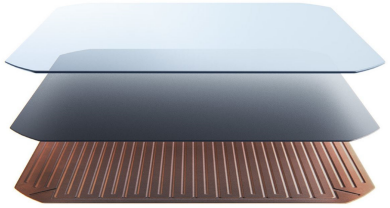

Maximum Lifetime Energy and Savings

The SunPower Maxeon 3 solar panel is designed to deliver 35% more energy in the same space over 25 years in real-world conditions such as partial shade and high temperatures.[1,5,6]

A Better Product. A Better Warranty.

The 25-year SunPower Complete Confidence Panel Warranty is backed by testing and field data from more than 30 million SunPower Maxeon panels deployed—and a demonstrated warranty return rate of 0.005%.[7]

BETTER PRODUCT · BETTER WARRANTY
25-yr SunPower Complete Confidence

• Year 1 Minimum Warranted Power Output	98.0%
• Maximum Annual Degradation	0.25%
• Year 25 Warranted Power Output	92.0%

Leadership in Sustainable Manufacturing

SunPower Maxeon panels—and the facilities in which they are produced—raise the bar for environmental and social responsibility. Included below are highlights of the certifications and recognition received by some of our products and manufacturing sites.

CERTIFIED cradle to cradle BRONZE

Declare.

NSF Landfill-Free Facility NSF P445

pv magazine AWARD 2019 SUSTAINABILITY

MAXEON 3 BLK POWER: 400-415 W | EFFICIENCY: Up to 21.6%

Preliminary Datasheet

Electrical Data		
	SPR-MAX3-410-BLK	SPR-MAX3-400-BLK
Nominal Power (Pnom) [8]	410 W	400 W
Power Tolerance	+5/0%	+5/0%
Panel Efficiency	21.6%	21.1%
Rated Voltage (Vmpp)	66.9 V	66.09 V
Rated Current (Impp)	6.13 A	6.05 A
Open-Circuit Voltage (Voc) (+/–3%)	80.41 V	80.32 V
Short-Circuit Current (Isc) (+/–3%)	6.31 A	6.29 A
Max. System Voltage	1000 V IEC	
Maximum Series Fuse	20 A	
Power Temp Coef.	–0.27% / °C	
Voltage Temp Coef.	–0.236% / °C	
Current Temp Coef.	0.058% / °C	

Tests And Certifications (Pending)	
Standard Tests [9]	IEC 61215, IEC 61730
Quality Management Certs	ISO 9001:2015, ISO 14001:2015
Ammonia Test	IEC 62716
Desert Test	IEC 60068-2-68, MIL-STD-810G
Salt Spray Test	IEC 61701 (maximum severity)
PID Test	1000 V: IEC 62804
Available Listings	TUV

Sustainability Tests and Certifications	
IFLI Declare Label	First solar panel labeled for ingredient transparency and LBC-compliance.[11]
Cradle to Cradle Certified™ Bronze	First solar panel line certified for material health, water stewardship, material reutilization, renewable energy & carbon management, and social fairness.[12]
Green Building Certification Contribution	Panels can contribute additional points toward LEED and BREEAM certifications.
EHS Compliance	RoHS, OHSAS 18001:2007, lead free, REACH SVHC-163

Operating Condition And Mechanical Data	
Temperature	–40°C to +85°C
Impact Resistance	25 mm diameter hail at 23 m/s
Solar Cells	112 Maxeon 3 Cells
Tempered Glass	High-transmission tempered anti-reflective
Junction Box	IP-68, Stäubli (MC4), 3 bypass diodes
Weight	21.2 kg
Max. Load [10]	Wind: 2400 Pa, 244 kg/m² front & back Snow: 5400 Pa, 550 kg/m² front
Frame	Class 1 black anodized (highest AAMA rating)

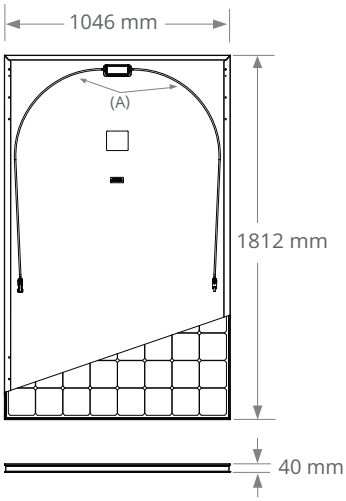

FRAME PROFILE

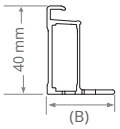

A. Cable Length:
1000 mm +/-10 mm

B. LONG SIDE: 32 mm
SHORT SIDE: 24 mm

Please read the safety and installation guide.

1 Based on datasheet review of websites of top 20 manufacturers per IHS, as of June 2021.
2 Jordan, et. al. Robust PV Degradation Methodology and Application. PVSC 2018.
3 Based on January 2021 review of warranties on manufacturer websites for top 20 manufacturers per IHS.
4 SunPower Maxeon panels expected useful life of 40 years. Source: "SunPower Module 40-Year Useful Life," Useful life is defined as 99 out of 100 panels operating at more than 70% of rated power.
5 SunPower 410 W, 21.5% efficient, compared to a Conventional Panel on same-sized arrays (350 W, 19.2%, ~1.82m²mono PERC, 19% efficient, approx. 1.64 m²)
6 PV Evolution Labs "SunPower Shading Study," 2013. 30% more energy compared to a conventional front contact panel.
7 SunPower panels are less than 50 dppm, or 0.005%, on over 15 million panels shipped - Source: "A Comparative Study: SunPower DC Solar Module Warranty Claim Rates" 2019.
8 Standard Test Conditions (1000 W/m² irradiance, AM 1.5, 25° C). NREL calibration Standard: SOMS current, LACCS FF and Voltage.
9 Class C fire rating per IEC 61730.
10 Safety factor 1.5 included.
11 SunPower Maxeon DC panels first received the International Living Future Institute Declare Label in 2016.
12 SunPower Maxeon DC panels are Cradle to Cradle Certified™ Bronze - www.c2ccertified.org/products/scorecard/e-series_x-series_solar_panels_-_sunpower_corporation. Cradle to Cradle Certified™ Bronze. Cradle to Cradle Certified™ is a certification mark licensed by the Cradle to Cradle Products Innovation Institute.

Designed in U.S.A. by SunPower Corporation
Made in Philippines (Cells)
Assembled in Malaysia (Module)

Specifications included in this datasheet are subject to change without notice.

©2021 Maxeon Solar Technologies. All Rights Reserved.
View warranty, patent and trademark information at maxeon.com/legal.

SUNPOWER
FROM MAXEON SOLAR TECHNOLOGIES

sunpower.maxeon.com

Please read the safety and installation instructions.
Visit www.sunpower.maxeon.com/int/PVInstallGuideIEC
Paper version can be requested through techsupport.ROW@maxeon.com

539974 REV A / A4_EN
Publication Date: July 2021