EN ver 03_2017

INSTALLATION GUIDE

SN SERIES 1,000V

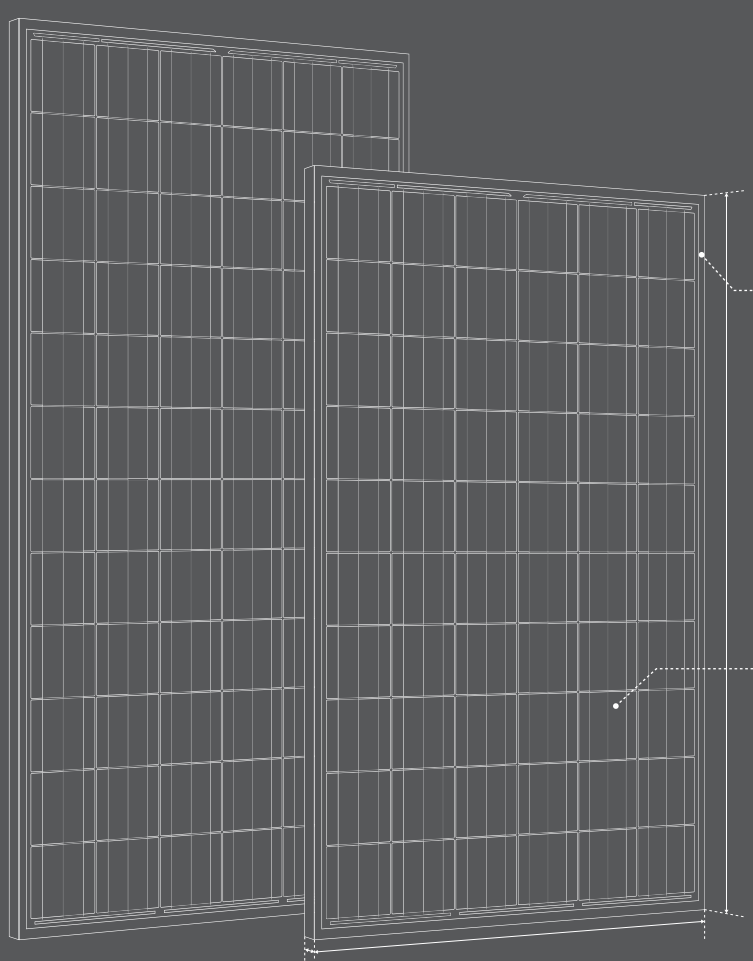

Copyright 2017. ***S-Energy*** all rights reserved.

S-Energy

Rev history

Rev.	Date	Description	Page No.
0.0	2017.01.01	1st edition	
1.0	2017.01.01	Add electrical characteristics of SN270P-10	10
2.0	2017.07.14	Add electrical charateristics of Mono Series	11
3.0	2017.08.28	Change Maximum series fuse rating & Add electrical charateristics of SN305M-10,SN365M-10	13

INDEX

Chapter	Page No.
Before Use	01
1. Accessories	01
2. Safety Precautions	02
3. Environmental Considerations	03
4. Caution before Installation	04
5. Caution when Installed	04
6. Electrical Installation	05
7. Grounding Method	06
8. Mechanical Installation	07
9. Maintenance	09
10. Cleaning Instructions	09
11. Detailed Module Specification	10
12. Installation Instructions	13

Before Use

1) This installation manual (hereinafter referred to as "this manual") includes installation and maintenance methods, and important safety instructions for the PV module(hereinafter referred to as "PV module") produced and sold by ***S-Energy***. Please store this manual in the visible area for future reference after installation.

2) Any troubles caused by failure to comply with these instruction during the installation, use, operation, maintenance of the module may be excluded for warranty.

3) All installation, operation shall be based on this manual, and the actual installation, use, operation and maintenance should be performed by qualified personnel with electrical license.

4) For the detailed quality warranty policy of the product, please refer the quality assurance provided by S-Energy Co., Ltd..

5) When the contents of this manual conflict with the quality assurance, the quality assurance takes precedence.

6) In order to provide better service, the information included in this manual is subject to change without prior notice.

1. Accessories

The name of each part of solar module is presented as 'Fig. 1'.

When requesting maintenance, please inform malfunction part and its performing status including the name of each part by referencing the left figure.

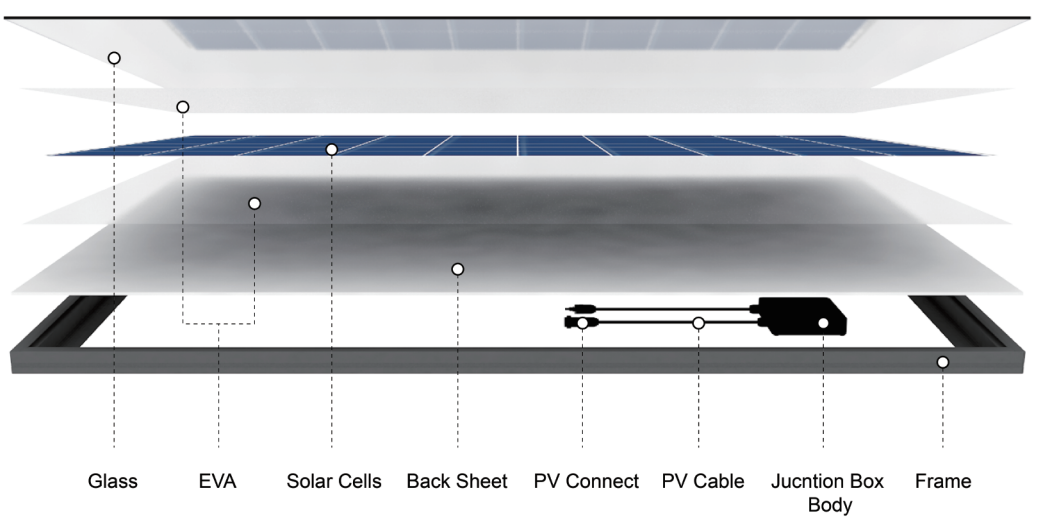

< Fig. 1 >

2. Safety Precautions

These “Safety Precautions” should be thoroughly understood before installing.

DANGER

When connecting with '+', '-' in module, the cable shall be equipped with direct current, and shall not connect or disconnect with module when electricity flows. If an abnormal or old electrode is connected, you may get injured by sparks arising from direct current.

※ **PV module installation should be performed by qualified person only.**

CAUTION

	CAUTION	RECOMMENDATION
	The utmost care is required for preventing corrosion/ contamination/deterioration due to mishandling when you load/outdoor load/installation.	Store a module in an indoor warehouse before installing.
	Always wear protective equipment while working with PV modules.	Working on a PV system requires following all applicable local codes and wearing protective equipment, and must be performed by appropriately qualified and authorized personnel only.
	Do not place heavy objects on the module. Stepping on or allowing objects to fall on the module may damage certain parts of the product and slow down the performance significantly, or causes risks to the whole system.	
	Do not install when snowy, rainy, and windy days. Do not install where water remains on the ground.	Install when the weather is clear.
	All surfaces and corners are fragile, so touch only the frame areas when moving/installing. And do not allow direct shock or hit to the module.	PV module should be installed by a two person team. Be careful when handling because the shock may cause damage or low performance.

3. Environmental Considerations

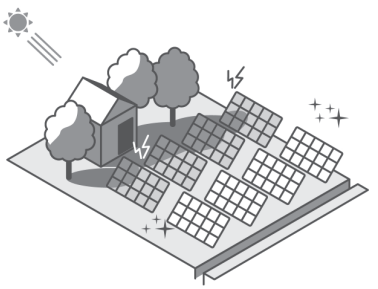

ENVIRONMENTAL CONSIDERATIONS

1) The shading of the front surface is the main cause of hot spot or performance reduction of power generation.
2) The ground should have well drained soil.

	CAUTION		CAUTION
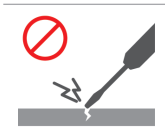	Do not scratch by a sharp tool on the module frame and surface. Abrasion of the coated surface may lead to oxidize frames or reduce their strength.The scratch of the surface may be the main cause of the module output degradation and decrease in strength.		Prohibited taking J-box cable when you handle the modules. [Resulting in electrical disconnection.]
	The front surface of the module shall not be exposed to sunlight artificially. [It can cause performance degradation due to solar cell degradation.]	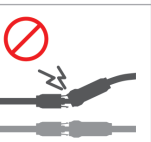	Prohibited connecting diagonally Male & Female when electrical [connector] connecting. [Resulting in poor contact.]
	Do not touch or give shocks to the Junction box as well as front and rear surface of module, and do not remove the label.	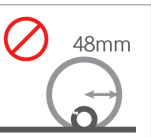	Cable outer diameter of 8mm/ Recommended by more than 48mm radius of curvature. [Cable minimum bend radius is more than 6 times the cable diameter when wiring.]
	Do not touch with wet hands or equipment, which can result in electric shock.		Cable wiring securely fixed to prevent shaking in the wind with cable tie. [However, consider summer/winter thermal expansion/contraction.]

4.Caution before Installation

Please read this instruction before installing PV module.

1) The installation of PV module should be performed by qualified personnel only.
2) When installing PV module, you should wear protective equipment. [electric shock or falling accident risk.]
3) When installing PV module, do not step up onto the PV module or place the object on it.
4) After installation, qualified person shall check whether it operates properly or not.
5) Disassembling or replacing of the PV module part is not allowed without permission by manufacturer, and if you disassemble or replace anything, please inform the PV module manufacturer.
6) When disassembling or replacing the part with manufacture's permission, it should be performed by qualified person only, and use the certified accessories.
7) All installation work most be done to meet the local applicable standards, such as the recent National Electrical Code or National Electrical Standards.
8) When the PV module is damaged or stopped, anyone, even who has useful knowledge for the PV module, should not approach to the PV module. Touch or approach may cause serious injury, in which case manufacturer is not responsible for the damage therefrom.
9) PV module's orientation shall be at equator direction, and be installed at the same angle as the latitude of the installation location for the optimal generation performance. If it is installed at a different angle or direction, it may adversely affect an annual generation capacity. In case of horizontal installation, ***S-Energy*** recommends regular cleaning to remove dust on the surface.
10) PV module generates the voltage even without load connection. So, be careful for sparks especially when assembling / disassembling PV module.
11) PV module is intended to be installed on the ground or building.
If you need to install on the vehicle(car, train, etc.) or ship, please request special modules.
12) Snow, water, dust, or other foreign substance on the surface may increase reflection of the light and eventually reduce the PV module's output. [Regular cleaning of module surface can improve performance.]
13) Standard specifications was measured at STC rating conditions, temperatures can get very effective in increasing power generation is low.
14) Before installation, modules should be stored under packing condition.
15) Irrespective of module connection, contacting current carrying part may cause a burn or fatal electrical shock from sparks.
16) The shading of the front surface of the module can cause the module degradation by fire or reduce its lifecycle.
17) When working with the PV module wire, connect the wire with a hanger to avoid contact on the roof or ground.
18) Dual glass modules do not present any exposed conductive parts, and therefore do not require to be electrically grounded for compliance to the National Electrical Code.
19) Do not use or install broken modules; Failure to comply may result in fire, electric shock, and injury.

5. Caution when Installed

1) Please make sure that installed module wire distribution is correct, and insulation and waterproof performance of connect part is suitably installed.
2) Check if there are any scratches on the frame and front surface of the glass.
[The scratch may lead oxidation and reduce the strength.]
3) Regularly clean the module with water, and if the module is not cleaned with water, request to the manufacturer. [Regular cleaning can significantly improve the output capacity.]
4) The front surface of glass is specially treated, so do not apply any abrasive cleaning product or chemicals.
5) Periodic inspection should be performed only by qualified personnel with protective equipment.
6) To avoid shade by the vegetation environment, regular weeding is needed.

6. Electrical Installation

CAUTION

1) Electrical risks must be prevented during installation, distribution, generation, and maintenance of PV module.
2) During installation of PV module, system voltage should not exceed. [IEC 1000V]
3) When installing the system, use same rate of model. [If you use a electrically and physically different type of module, output capacity or system performance may be reduced due to fire.]
4) When wiring, you should connect polarity appropriately, and if not, it can cause abnormal generation performance and PV module degradation by fire.
5) For the reverse current value, refer the Fuse rating value specified in '9. Detailed module specification'. If exceed its value, connect the rated overcurrent protective device(permitted by local regulation) to the module string in series wiring.
6) Junction box is in the rear surface of the module. This box is an important device for the module generation, and never unpack it in any circumstance in the field. [Once the junction box is opened, warranty will be invalidated.]
7) If the PV module have any electrical problem, you should inspect the module according to the warranty term provided by ***S-Energy***, and return it to ***S-Energy*** for repair and replacement.
8) The fire rating of this module is valid only when mounted in the manner specified in the mechanical mounting instructions.
9) The module is considered to be in compliance with UL 1703 only when the module in mounted in the manner specified by the mounting instructions below.
10) A module with exposed conductive parts is considered to be in compliance with UL 1703 only when is electrically grounded in accordance with the instructions presented below and the requirements of the National Electrical Code.
11) Any module without a frame (laminate) shall not be considered to comply with the requirements of UL 1703 unless the module with hardware that has been tested and evaluated with the module under this standard or by a field inspection certifying that the installed module complies with the requirements of UL 1703.

In normal conditions, PV modules may produce larger current and/or voltage than reported in the standard test conditions. Therefore, when voltage evaluations for components, capacity of conductors, size of fuses, and size of control systems connected to the module output are determined, multiply the values of short- circuit current (Isc) and open-circuit voltage (Voc) that are marked in SN series modules by the NEC, 1.25 (Source: American National Electrical Code)

A. Series Wiring

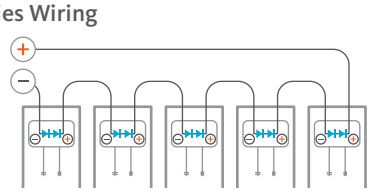

< SERIES WIRING [VOLTAGE ADDED] >

- Wires may be connected in series to generate the required voltage output.
- Series wiring should be configured at the same rate. (current)
- Only for UL 1703, When wires are connected in series, the maximum voltage should be under 800Vdc that is 80% of system Voltage 1000Vdc

B. Parallel Wiring

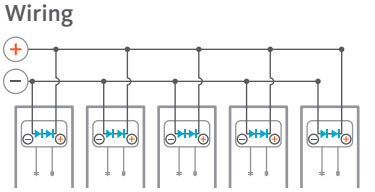

< PARALLEL WIRING [CURRENT ADDED] >

- Wires may be connected in parallel to generate the required current output.
- Even when wires are connected in parallel, the intensity of voltage in inverter should be considered.
- Before connected to other modules, all modules should be wired with a fuse. For the number of additional fuses and maximum number of module should refer and follow the related local regulations.

- **Material :**

  All the wire for the PV module connection should be configured with PV cable only. [Cable for PV : double insulation, UV resistance, temperature resistant for more than minimum 90°C.] Use copper wire for all wiring.

- **Diameter:**

  At least larger than minimum 12AWG. [4mm^2]
  [wiring diameter should confirm the local regulation, and **S-Energy Co., Ltd.** recommends the customer use wires with a diameter larger than the above number at minimum.]

- **Module configuration[Series wiring]**

  [{(Min Temp °C− 25°C) x (Voc x -Temperature coefficient of Voc)} + Voc] x Panels per string = Maximum system Voltage
  To guarantee the maximum voltage limitation condition, ensure the general temperature condition according to the National Electric Code (690.7)

7. Grounding Method

For preventing electric shock and fire, the frame of PV module shall be grounded properly.

[Please be sure to remove a coated portion when grounding, because the PV module aluminum frame is coated with anodizing.]

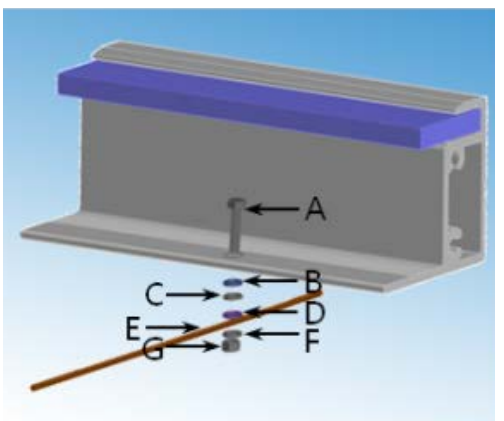

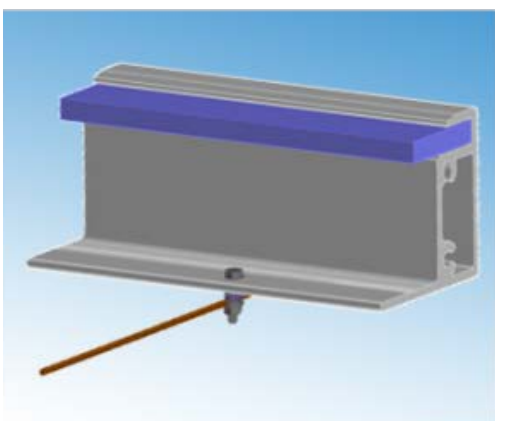

Configuration	Size and material	Remarks
A	M4 Bolt	16 mm
B	M4 Star washer	
C	M4 Plat washer	
D	M4 Cup washer	
E	Grounding wire	12 AWG
F	M4 Plat washer	
G	M4 Nut	

Materials

- SUS304: Bolt, Nut, Washer (Steel Use Stainless)
- Grounding wire: Copper

Torque: 0.9Nm ~ 1.1Nm

For the detail of Earth, refer to NEC(National Electric Code) 690 grounding PV arrays for special requirements.

- Where common grounding hardware (nuts, bolts, star washers, spilt-ring lockwashers, flat washers and the like) is used to attach a listed grounding/bonding device, the attachment must be made in conformance with the grounding device manufacturer's instructions.

- Common hardware items such as nuts, bolts, star, washers, lock washers and the like have not been evaluated for electrical conductivity or for use as grounding devices and should be used only for maintaining mechanical connections and holding electrical grounding devices in the proper position for electrical conductivity. Such devices, where supplied with the module and evaluated through the requirements in UL 1703, may be used for grounding connections in accordance with the instructions provided with the module.

8. Mechanical Installation

1) Grade[Class A]: The module is a 'Class A' grade.

Class A: This grade is regarded as a device operated above 50V or above 240W and a product where an ordinary person's approach is expected. It acquired the safety standard under IEC 61730-1 and IEC 61730-2.

2) Installation site: The module should be installed at a place satisfying the following Respect.

· **Safety load**

A 60/72 cells series products were designed to tolerate the wind load(the back side) of 30lbs/ft²(UL 1703) and 2400Pa(IEC 61215), snow load(the front side) of 30lbs/ft²(UL 1703) and 5400Pa(IEC 61215).
When the maximum snowfall and wind load on the site are above the standard, a structure to install the module on should be designed to satisfy the mechanical load of the site.

· **Operating temperature**

A ambient temperature of module installation site is limited by the minimum and maximum temperature as shown below.
[Considerations when temperature rises: output is reduced due to characteristics of the module.]
- Maximum operating temperature: +85°C [Under the hot temperature, ventilation should be considered.]
- Minimum operating temperature: -40°C

· **Places where the installation is prohibited**

- A site directly contacting salt injury.
- A site having poor drainage. [Poor drainage can shorten the module life.]
- A site having a shade caused by the geographic features of the surrounding area.
- A site where stones and foreign matters are often thrown near to the modules.
  [There are concerns for damage to the front window of the module.]
- The heating properties of extremely high gas or vapor (filling stations, gas cylinders, paint, etc.) nearby flame or combustible materials.

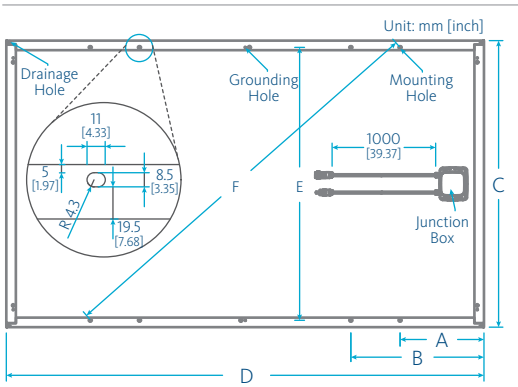

‹ Back View ›

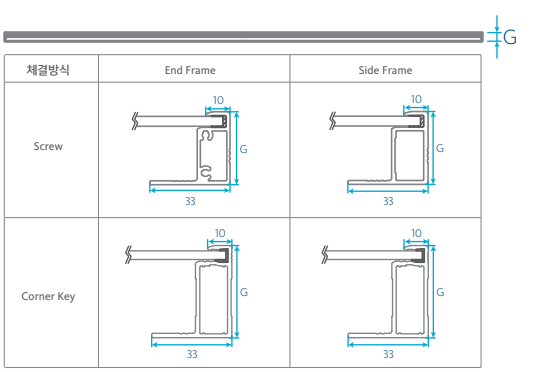

‹ Side View ›

Unit: mm

Position	60 Cells Series	72 Cells Series
A	290	345
B	460	550
C	990	990
D	1650	1970
E	942.5	942.5
F	1425.9	1589.6
G	30 / 40	40

How to use a frame installation hole

1) **How to use a frame installation hole**

   Please install the module at the angle having the most annual cumulative amount of solar radiation in the applicable site.

2) **Confirmation matter**

   a) To improve module's electrical insulation and durability, the back side [Junction Box] of module should be protected to avoid exposure to moisture, and PV module wiring should be installed considering thermal expansion due to ambient temperature and vibration due to wind.

   b) When a PV module is installed on a roof, between the back side of the PV module and roof is maintained at a sufficient distance(minimum above 2 inch) to be well ventilated.

   c) According to the laws of the applicable site, the PV module can be installed on a fire resistance roof.

   d) For UL 1703, the PV module's system class 'A' fire rating. And for IEC 61730, the fire rating is 'C'.

   e) Only for UL 1703, the modules with the specified construction in below table, when used with a Listed mounting system that has been rated as a Class 'A' System when installed with type 1 or type 2 modules, is suitable to maintain the System Class 'A' Fire Rating.

   f) Only for UL 1703, The fire rating of the module is valid only when mounted in the manner specified in the mechanical mounting instructions.

3) **Installation hole**

   The method of installing a frame hole passed a mechanical load test item in accordance with the IEC 61215 and UL 1703 standard, and **S-Energy Co., Ltd.** recommends the following method of installing a frame hole. As described in ‹fig. 1›, an installation hole is inserted in the frame, if the frame is randomly processed or the installation hole is changed, the module will be damaged or the strength of frame will be declined.

Hole Installation

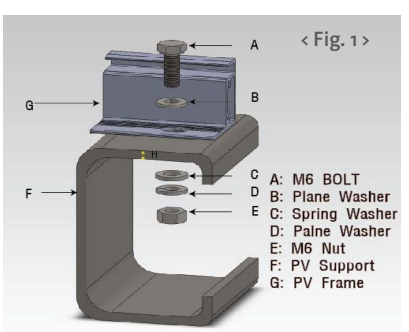

- Bolt Torque: 5Nm ~ 7Nm (Newton-meters)
- 60 Cells Series Bolt size: M6 L16 Bolt
  (PV Support T : ≤4mm)
- 72 Cells Series Bolt size: M6 L20 Bolt

SNxxxP-10

Specific construction	Marking
Superstrate: 2.8 mm thick EVA: 0.45 mm thick Substrate: 0.291 mm Frame: 1970 * 990 * 40 mm Cross sectional dimension: 33 * 40 mm Height: 40 mm Thickness: 1.8 mm	Module Fire Performance: Type 2
Superstrate: 2.8mm thick EVA: 0.45mm thick Substrate: 0.354 mm Frame: 1970 * 990 * 40mm Cross sectional dimension: 33 * 40 mm Height: 40 mm Thickness: 1.8 mm	Module Fire Performance: Type 1

CAUTION

1) Be careful to avoid sealing the gap between the module and the structure, because the area should be well ventilated. The module of power performance and life can be affected, if the space between the module and structure is sealed.

2) Please leave a space between the modules because the module can be expanded or be shrink depending on the ambient temperature.

3) In case of failure to use the accessories recommended by **S-Energy Co., Ltd.**, it may affect the long term reliability of the module, and **S-Energy Co., Ltd.** do not take any responsibility for life-shortening of the module resulting from such use.

09. Maintenance

S-Energy Co., Ltd. to ensure optimal performance of the module, it is recommended to maintain.

1) To ensure the electrical and mechanical safety of module, check the electrical and physical connection on a regular basis.
   - ※ Modules and structural loosening bolts, check that there are indisposition grounded and the ground wire corrosion.
   - ※ Please confirm that no shading occurs due to the surrounding vegetation and buildings in front of the module.
   - ※ Junction box and connectors, check that there are no loose and damaged the fixed site.

2) To maintain a stable generation performance please check the regularly around the module front and rear.
   - ※ Please confirm that there are no front glass breakage.
   - ※ Please check back Backsheet there is burnout.
   - ※ Make sure there are no heat problems during generate of the module.
   - ※ Please confirm that no modification coating module wiring section and burnout.

⚠ CAUTION

- ※ **Installation and maintenance of the photovoltaic modules must be carried out only by qualified personnel held.**
- ※ **Wear safety equipment during maintenance.**
- ※ **Maintenance of the photovoltaic modules other components, please refer to the vendor Maintenance Manual.**

10. Cleaning Instructions

The front glass of the modules produced in S-Energy Co., Ltd. is using the general low iron glass and the ARC glass to minimize with light reflection. Cleaning time is taking into account the thermal shock and power generation, please proceed early in the morning and cloudy weather.

Cleaning method and procedure

Step 1: Off bets
Such as dry leaves and debris on the module surface will have to pay it off with a dry cloth or dust tremble.
If there is debris on the module surface, cleaning of these steps will be omitted because it is completed.

Step 2: Wipe
Dirt, bird secretions, twigs, leaves, etc., if solid foreign objects attached to the module, please wipe gently with a soft cloth that do not cause injury to the module.

Step 3: Rinse bet
Bird secretions, unable to shake off the dust cause of external humidity or plant essences such as colored debris on the module surface, should be removed by rinse bet method.
For the colored debris remove give heavy water sprayed on the affected area and wipe gently with a soft cloth, makes regular cleaning necessary.

⚠ CAUTION

- ※ ***S-Energy*** **modules are designed to withstand pressure 30lbs/ft²(UL 1703) and 5,400Pa(IEC 61215).**
  If you decide to clean the snow in order to ensure the long-term growth and performance of the power generation module, the module's surface, do not remove the ice. Scratch the surface can be generated.
- ※ **There is a danger of electric shock, broken glass and broken wires, exposed wires, do not wash.**
- ※ **Do not use the grinding dust, polish, sodium, benzene, alkali, and other chemical substances.**

11. Detailed Module Specification (IEC)

1) Electrical Specifications (Poly_IEC)

· 60 Cells

STC (Irradiance 1000W/m^2,Module temperature 25°C, AP-1.5)	SN245P-10	SN250P-10	SN255P-10	SN260P-10	SN265P-10	SN270P-10
Rated Power(P_{max})	245 W	250 W	255 W	260 W	265 W	270 W
Voltage at Pmax(V_{mp})	29.2 V	29.7 V	30.7 V	30.2 V	30.7 V	30.9 V
Current at Pmax(I_{mp})	8.39 A	8.42 A	8.50 A	8.60 A	8.64 A	8.72 A
Warranted Minimum P_{max}	245 W	250 W	255 W	260 W	265 W	270 W
Short-Circuit Current (I_{sc})	8.85 A	8.86 A	8.93 A	8.98 A	9.04 A	9.10 A
Open-Circuit Voltage (V_{oc})	37.3 V	37.3 V	37.6 V	38.0 V	38.1 V	38.3 V
Module Effeciency	15.0 %	15.3 %	15.6 %	15.9 %	16.2 %	16.5 %
Operating Module Temperature	-40°C to +85°C					
Maximum System Voltage	1,000V(IEC)					
Maximum Series Fuse Rating	15 A					
Maximum Reverse Current	20.25 A					
Power Tolerance	0 ~ +5 W					

· 72 Cells

STC (Irradiance 1000W/m^2,Module temperature 25°C, AP-1.5)	SN295P -10	SN300P -10	SN305P -10	SN310P -10	SN315P -10	SN320P -10	SN325P -10
Rated Power(P_{max})	295 W	300 W	305W	310 W	315 W	320 W	325 W
Voltage at Pmax(V_{mp})	35.1 V	35.6 V	36.0 V	36.3 V	36.6 V	36.9 V	37.3 V
Current at Pmax(I_{mp})	8.40 A	8.44 A	8.47 A	8.54 A	8.61 A	8.68 A	8.72 A
Warranted Minimum P_{max}	295 W	300 W	305 W	310 W	315 W	320 W	325 W
Short-Circuit Current (I_{sc})	8.85 A	8.88 A	8.90 A	8.96 A	9.01 A	9.07 A	9.10 A
Open-Circuit Voltage (V_{oc})	44.8 V	44.9 V	45.1 V	45.4 V	45.6V	45.9 V	46.0 V
Module Effeciency	15.1 %	15.4 %	15.6 %	15.9 %	16.2 %	16.4 %	16.7 %
Operating Module Temperature	-40°C to +85°C						
Maximum System Voltage	1,000V(IEC)						
Maximum Series Fuse Rating	15 A						
Maximum Reverse Current	20.25 A						
Power Tolerance	0 ~ +5 W						

2) Temperature Characteristics

Item	Value
Temperature coefficient of I_{sc}	0.056 % / °C
Temperature coefficient of V_{oc}	-0.301 % / °C
Temperature coefficient of power	-0.398 % / °C
NOCT (T_{air} 20°C ; Irradiance 800W/m^2 ; Wind 1m/s)	45±2 °C

1) Electrical Specifications (Mono_IEC)

· 60 Cells

STC (Irradiance 1000W/m^2,Module temperature 25°C, AP-1.5)	SN270M -10	SN275M -10	SN280M -10	SN285M -10	SN290M -10	SN295M -10	SN300M -10
Rated Power(P_{max})	270 W	275 W	280 W	285 W	290 W	295 W	300 W
Voltage at Pmax(V_{mp})	30.9 V	31.3 V	31.7 V	32.1 V	32.6 V	33.1 V	33.6 V
Current at Pmax(I_{mp})	8.73 A	8.78 A	8.84 A	8.87 A	8.89 A	8.91 A	8.93 A
Warranted Minimum P_{max}	270 W	275 W	280 W	285 W	290 W	295 W	300 W
Short-Circuit Current (I_{sc})	9.22 A	9.30 A	9.40 A	9.46 A	9.50 A	9.54 A	9.57 A
Open-Circuit Voltage (V_{oc})	39.5 V	39.8 V	40.2 V	40.5 V	40.7 V	40.9 V	41.0 V
Module Effeciency	16.5%	16.8 %	17.1 %	17.4 %	17.8 %	18.1 %	18.4 %
Operating Module Temperature	-40°C to +85°C						
Maximum System Voltage	1,000V(IEC)						
Maximum Series Fuse Rating	15 A						
Maximum Reverse Current	20.25 A						
Power Tolerance	0 ~ +5 W						

· 72 Cells

STC (Irradiance 1000W/m^2,Module temperature 25°C, AP-1.5)	SN325M -10	SN330M -10	SN335M -10	SN340M -10	SN345M -10	SN350M -10	SN355M -10	SN360M -10
Rated Power(P_{max})	325 W	330 W	335 W	340 W	345 W	350 W	355 W	360 W
Voltage at Pmax(V_{mp})	37.3 V	37.7 V	38.1 V	38.5 V	38.9 V	39.4 V	39.9 V	40.3 V
Current at Pmax(I_{mp})	8.72 A	8.76 A	8.79 A	8.84 A	8.87 A	8.89 A	8.90 A	8.92 A
Warranted Minimum P_{max}	325 W	330 W	335 W	340 W	345 W	350 W	355 W	360 W
Short-Circuit Current (I_{sc})	9.20 A	9.26 A	9.32 A	9.40 A	9.46 A	9.50 A	9.52 A	9.56 A
Open-Circuit Voltage (V_{oc})	47.4 V	47.6 V	47.9 V	48.3 V	48.6 V	48.8 V	48.9 V	49.1 V
Module Effeciency	16.7 %	16.9 %	17.2 %	17.4 %	17.7 %	17.9%	18.2 %	18.5 %
Operating Module Temperature	-40°C to +85°C							
Maximum System Voltage	1,000V(IEC)							
Maximum Series Fuse Rating	15 A							
Maximum Reverse Current	20.25 A							
Power Tolerance	0 ~ +5 W							

2) Temperature Characteristics (Mono_IEC)

Item	Value
Temperature coefficient of I_{sc}	0.046 % / °C
Temperature coefficient of V_{oc}	-0.282 % / °C
Temperature coefficient of power	-0.394 % / °C
NOCT (T_{air} 20°C ; Irradiance 800W/m^2 ; Wind 1m/s)	45±2 °C

11. Detailed Module Specification (UL)

1) Electrical Specifications (Poly_UL)

· 60 Cells

STC (Irradiance 1000W/m^2,Module temperature 25°C, AP-1.5)	SN245P-10	SN250P-10	SN255P-10	SN260P-10	SN265P-10	SN270P-10
Rated Power(P_{max})	245 W	250 W	255 W	260 W	265 W	270 W
Voltage at Pmax(V_{mp})	29.2 V	29.7 V	30.0 V	30.2 V	30.7 V	30.9 V
Current at Pmax(I_{mp})	8.39 A	8.42 A	8.50 A	8.60 A	8.64 A	8.72 A
Warranted Minimum P_{max}	245 W	250 W	255 W	260 W	265 W	270 W
Short-Circuit Current (I_{sc})	8.85 A	8.86 A	8.93 A	8.98 A	9.04 A	9.10 A
Open-Circuit Voltage (V_{oc})	37.3 V	37.3 V	37.6 V	38.0 V	38.1 V	38.3 V
Module Effeciency	15.0 %	15.3 %	15.6 %	15.9 %	16.2 %	16.5 %
Operating Module Temperature	-40°C to +85°C					
Maximum System Voltage	1,000V(UL)					
Maximum Series Fuse Rating	15 A					
Maximum Reverse Current	20.25 A					
Power Tolerance	0 ~ +5 W					

· 72 Cells

STC (Irradiance 1000W/m^2,Module temperature 25°C, AP-1.5)	SN295P -10	SN300P -10	SN305P -10	SN310P -10	SN315P -10	SN320P -10	SN325P -10
Rated Power(P_{max})	295 W	300 W	305 W	310 W	315 W	320 W	325 W
Voltage at Pmax(V_{mp})	35.1 V	35.6 V	36.0 V	36.3 V	36.6 V	36.9 V	37.3 V
Current at Pmax(I_{mp})	8.40 A	8.44 A	8.47 A	8.54 A	8.61 A	8.68 A	8.72 A
Warranted Minimum P_{max}	295 W	300 W	305 W	310 W	315 W	320 W	325 W
Short-Circuit Current (I_{sc})	8.85 A	8.88 A	8.90 A	8.96 A	9.01 A	9.07 A	9.10 A
Open-Circuit Voltage (V_{oc})	44.8 V	44.9 V	45.1 V	45.4 V	45.6 V	45.9 V	46.0 V
Module Effeciency	15.1 %	15.4 %	15.6 %	15.9 %	16.2 %	16.4 %	16.7 %
Operating Module Temperature	-40°C to +85°C						
Maximum System Voltage	1,000V(UL)						
Maximum Series Fuse Rating	15 A						
Maximum Reverse Current	20.25 A						
Power Tolerance	0 ~ +5 W						

2) Temperature Characteristics

Item	Value
Temperature coefficient of I_{sc}	0.056 % / °C
Temperature coefficient of V_{oc}	-0.301 % / °C
Temperature coefficient of power	-0.398 % / °C
NOCT (T_{air} 20°C ; Irradiance 800W/m^2 ; Wind 1m/s)	45±2 °C

1) Electrical Specifications (Mono_UL)

· 60 Cells

STC (Irradiance 1000W/m2, Module temperature 25℃, AM1.5)	SN270M-10	SN275M-10	SN280M-10	SN285M-10	SN290M-10	SN295M-10	SN300M-10	SN305M-10
Rated Power(P_{max})	270 W	275 W	280 W	285 W	290 W	295 W	300 W	305 W
Voltage at Pmax(V_{mp})	31.3 V	31.5 V	31.9 V	32.0 V	32.1 V	32.4 V	32.8 V	33.2 V
Current at Pmax(I_{mp})	8.62 A	8.72 A	8.79 A	8.87 A	9.05 A	9.10 A	9.14 A	9.18 A
Warranted Minimum Pmax	270 W	275 W	280 W	285 W	290 W	295 W	300 W	305 W
Short-Circuit Current (I_{sc})	9.15 A	9.23 A	9.29 A	9.37 A	9.63 A	9.66 A	9.68 A	9.71 A
Open-Circuit Voltage(V_{oc})	38.1 V	38.2 V	38.3 V	38.4 V	39.6 V	39.7 V	39.9 V	40.1 V
Module Effeciency	16.5%	16.8%	17.1%	17.4%	17.8%	18.1%	18.4%	18.7%
Operating Module Temperature	-40℃ to +85℃							
Maximum System Voltage	1,000V (UL)							
Maximum Series Fuse Rating	20A							
Maximum Reverse Current	20.25A							
Power Tolerance	0 ~ +5W							

· 72 Cells

STC (Irradiance 1000W/m2, Module temperature 25℃, AM1.5)	SN325M-10	SN330M-10	SN335M-10	SN340M-10	SN345M-10	SN350M-10	SN355M-10	SN360M-10	SN365M-10
Rated Power(P_{max})	325 W	330 W	335 W	340 W	345 W	350 W	355 W	360 W	365 W
Voltage at Pmax(V_{mp})	37.3 V	37.5 V	37.8 V	38.1 V	38.3 V	38.5 V	38.7 V	39.1 V	39.4 V
Current at Pmax(I_{mp})	8.70 A	8.81 A	8.86 A	8.93 A	8.96 A	9.14 A	9.18 A	9.21 A	9.25 A
Warranted Minimum Pmax	325 W	330 W	335 W	340 W	345 W	350 W	355 W	360 W	365 W
Short-Circuit Current (I_{sc})	9.20 A	9.28 A	9.32 A	9.38 A	9.41 A	9.68 A	9.71 A	9.72 A	9.74 A
Open-Circuit Voltage(V_{oc})	44.9 V	45.1 V	45.2 V	45.2 V	45.3 V	46.7 V	46.8 V	47.0 V	47.2 V
Module Effeciency	16.7%	16.9%	17.2%	17.4%	17.7%	17.9%	18.2%	18.5%	18.7%
Operating Module Temperature	-40℃ to +85℃								
Maximum System Voltage	1,000V (UL)								
Maximum Series Fuse Rating	20A								
Maximum Reverse Current	20.25A								
Power Tolerance	0 ~ +5W								

2) Temperature Characteristics (Mono_UL)

Item	Value
Temperature coefficient of I_{sc}	0.046 % / °C
Temperature coefficient of V_{oc}	-0.282 % / °C
Temperature coefficient of power	-0.394 % / °C
NOCT (T_{air} 20°C ; Irradiance 800W/m^2 ; Wind 1m/s)	45±2 °C

12. Installation Instructions

1) Hole installation method

A. General installation [minor axis installation]

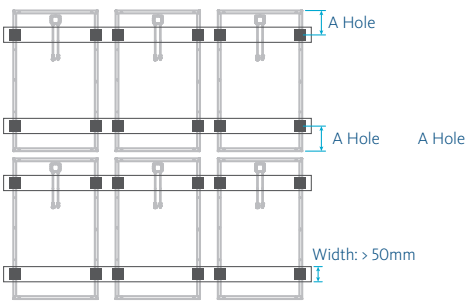

B. General installation [major axis installation]

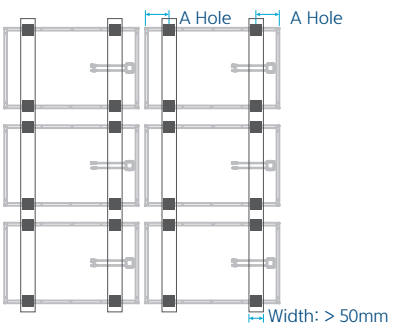

C. Special installation [minor axis installation]

The following installation method is recommended by ***S-Energy*** for the installation of the PV module on a roof in heavy snow regions.

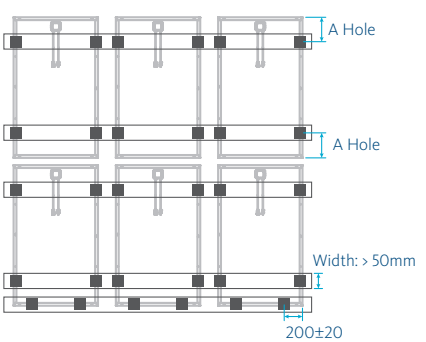

Perform additional fastenings at the bottom of the module's minor axis frame.
[Preventing load concentration due to the installation slope.]

CAUTION

Failure to remove accumulated snow on the PV module for long time may cause long-term power reduction.

2) Location and method of clamp installation

- : Clamp installation location (A position Confirm "7 mechanical installation" module drawing)
- Clamp width : 50mm or wider

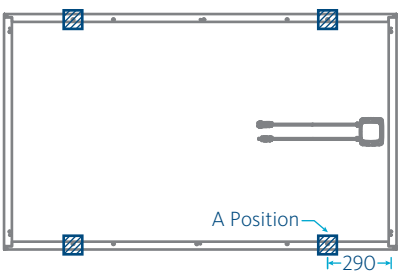

60 Cells Series

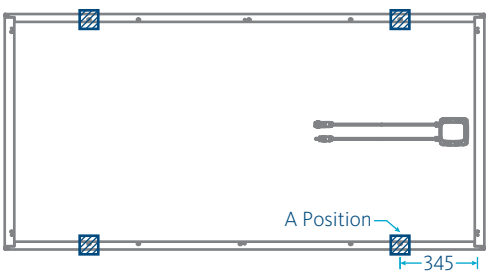

72 Cells Series

Module Clamp Assembly

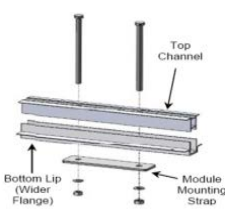

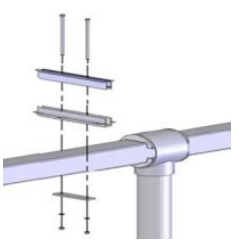

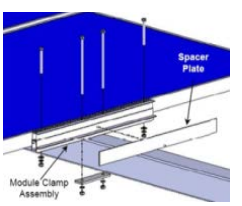

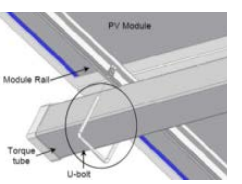

3) Additional Grounding Methods

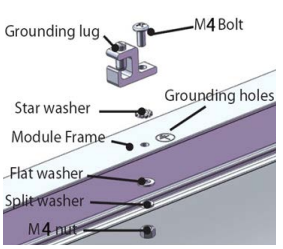

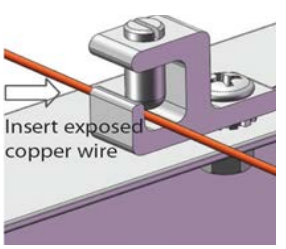

S-Energy

S-Energy Co., Ltd. ***www.s-energy.com/en***

HEAD OFFICE | Fl3, MiraeAsset Tower, 20, Pangyoyeok-ro 241 beon-gil Bundang-gu, Seongnam, Gyeonggi-do, 13494, Republic of KOREA
CONTACT | **Tel.** +82-70-4339-7100 **Fax.** +82-70-4339-7199 **E-mail.** energycare@s-energy.com

S-Energy S-Power S-Fuelcell S-Energy America S-Energy Japan S-Services